PROFIL TRANSVERSAL TIP 2/CROSS SECTION TYPE 2

Rigola prefabricata cu umar si capac, helev.=1.90m/Precast gutter with verge and cap, helev.=1.90m
Aplicabil pe partea stanga a drumului/c.f. intre/Applicable on the left side of the road/railway line between:
–km 492+039.96 – km 492+071.06, L=32.00m

LEGENDA
1. Rigola prefabricata din beton, clasa C30/37
2. Capac din beton armat, clasa C30/37.
3. Fundatie din beton, clasa C12/15.
4. Tub din PEHD ø110mm, gaurit la partea superioara
5. Sclviseala din mortar de ciment, grosime 2cm
6. Barbacana din tub PVC ø90mm
7. Fundatie dren din beton clasa C16/20
8. Umplutura drenanta din pietris sort 7/31
9. Geotextil
10. Umplutura compactata din argila, grosime 30cm
11. Hidroizolatie
12. Beton de panta clasa C16/20
13. Linia terenului existent

LEGEND
1. Precast gutter made of concrete, class C30/37.
2. Cap made of r.c., class C30/37.
3. Foundation concrete, class C12/15.
4. Tube made of PEHD ø110mm, with hole at the top side
5. 2cm thick cement wash made of cement mortar
6. Weeper made of tube PVC ø90mm
7. Foundation of the drain made of concrete class C16/20
8. Draining filling of gravel sort 7/31
9. Geotextile
10. 30 cm thick compacted filling made of clay
11. Waterproofing
12. Slope concrete class C16/20
13. Existing ground level.

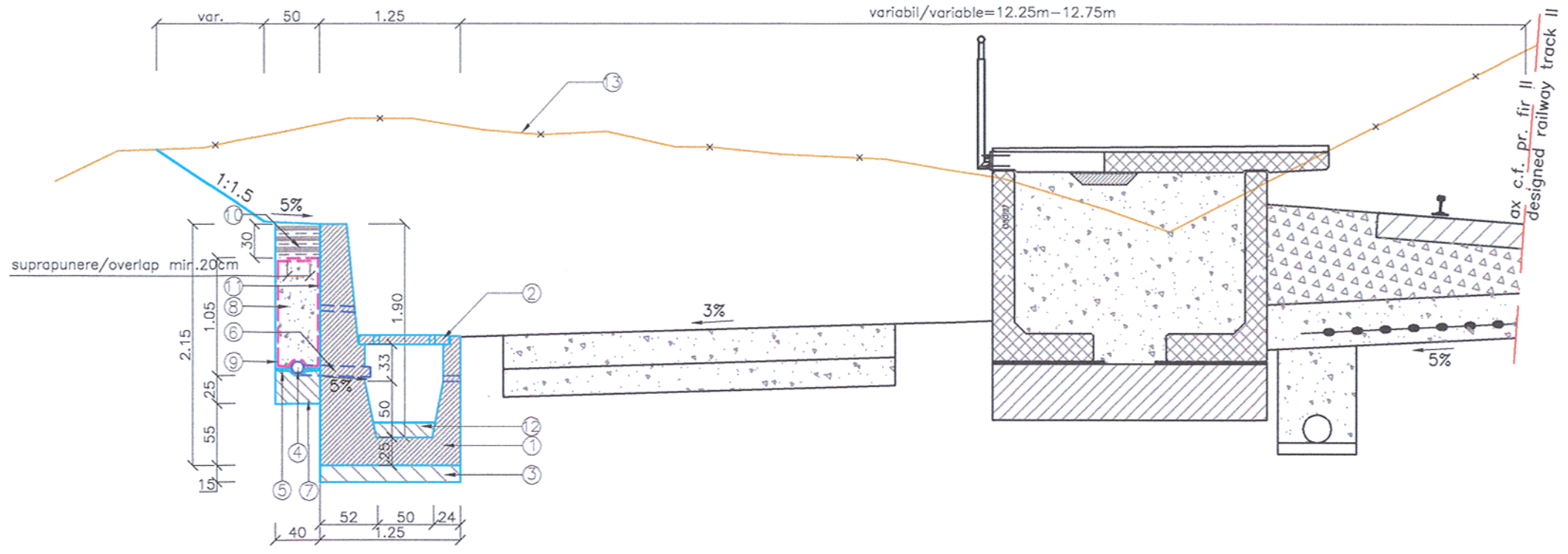

NOTA
1. Detalierea lucrarilor de tersasament c.f este prevazuta la obiectul "terasamente c.f.".
2. Detalierea peronului este prevazuta la obiectul "Arhitectura".

NOTE
1. The detailed presentation of railway embankment and road works is mentioned at the object "Railway embankments".
2. The detailed presentation of railway station platform is mentioned at the object "Architecture".

LEGENDA BETOANELOR/CONCRETE LEGEND

- Beton clasa C12/15, X0 / Concrete class C12/15, X0
- Beton clasa C16/20, XC1 / Concrete class C16/20, XC1
- Beton armat clasa C30/37, XF1,XC4 / Reinforced concrete class C30/37, XF1,XC4

Acest plan anuleaza si inlocuieste versiunea anterioara.
This plan cancels and replaces previous version.

Verificator / Expert Checker / Expert	Cerinta Requirement	Semnatura Signature	Referat / Expertiza Report / Expertise

European Investment Bank

MINISTERUL TRANSPORTURILOR

BENEFICIAR / BENEFICIARY :
CFR
COMPANIA NAȚIONALĂ DE CĂI FERATE "CFR" SA

PROIECTANT / DESIGNER: PÖYRY			Data Date	Semnatura Signature
Aprobat Approved	Şef de echipă Team leader	C. Teodorescu	01.2013	
Verificat Checked	Expert Cheie Key Expert	L. Mărculescu	01.2013	
Subcontractant / Subcontractor VIOTOP				
Aprobat Approved	Adjunct Şef de echipă Deputy Team leader	A.M. Baicu	01.2013	
Proiectat Designed	Inginer Engineer	L. Radu	01.2013	Radu

"Reabilitarea liniei c.f. Frontier ă - Curtici - Simeria, parte componentă a coridorului IV Pan - European pentru circula ţia trenurilor cu viteză maximă de 160 km/h"
Tronsonul 3: cap Y Gurasada - Simeria
"Rehabilitation of the Railway Line Border - Curtici - Simeria, component Part of the IV Pan - European Corridor for the Trains Circulation with maximum speed of 160 km/h"
Section 3 : end Y Gurasada - Simeria

Project 9i 35311.1

Faza / Phase: PTH+CS / TD+TS

Denumire desen / Drawing name:
INTERVAL ILIA - MINTIA
PUNCT DE OPRIRE VEȚEL / STOPPING POINT VEȚ EL
Profil transversal tip 2 / Cross section type 2

Scara / Scale	Revizia / Revision	Cod desen / Drawing Code	Nr / No
1:50	1/16.05.2013	PT.03.01.23.CO.201	02/08